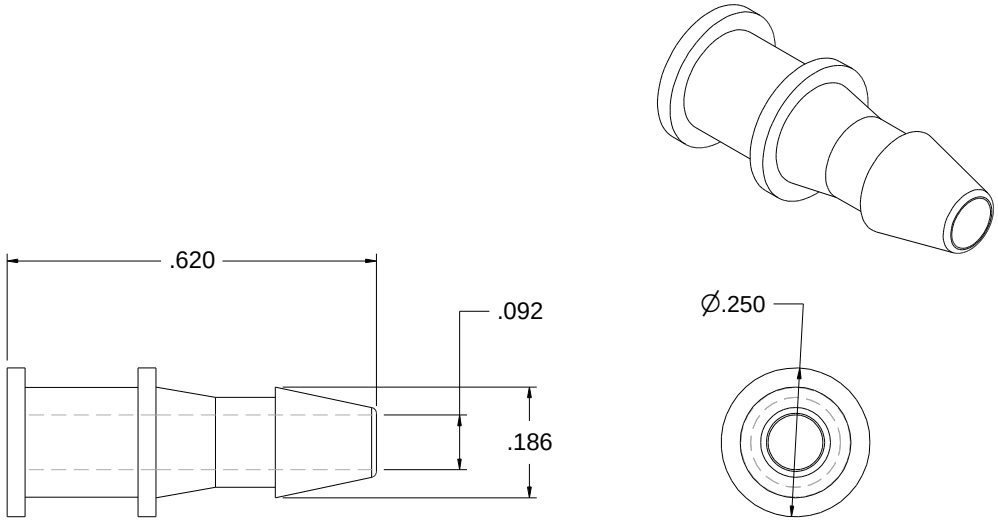

Glennco Fittings LLC	Part # 1603
For reference only Dimensions are in inches.	Plug for 1/8" ID tubing.