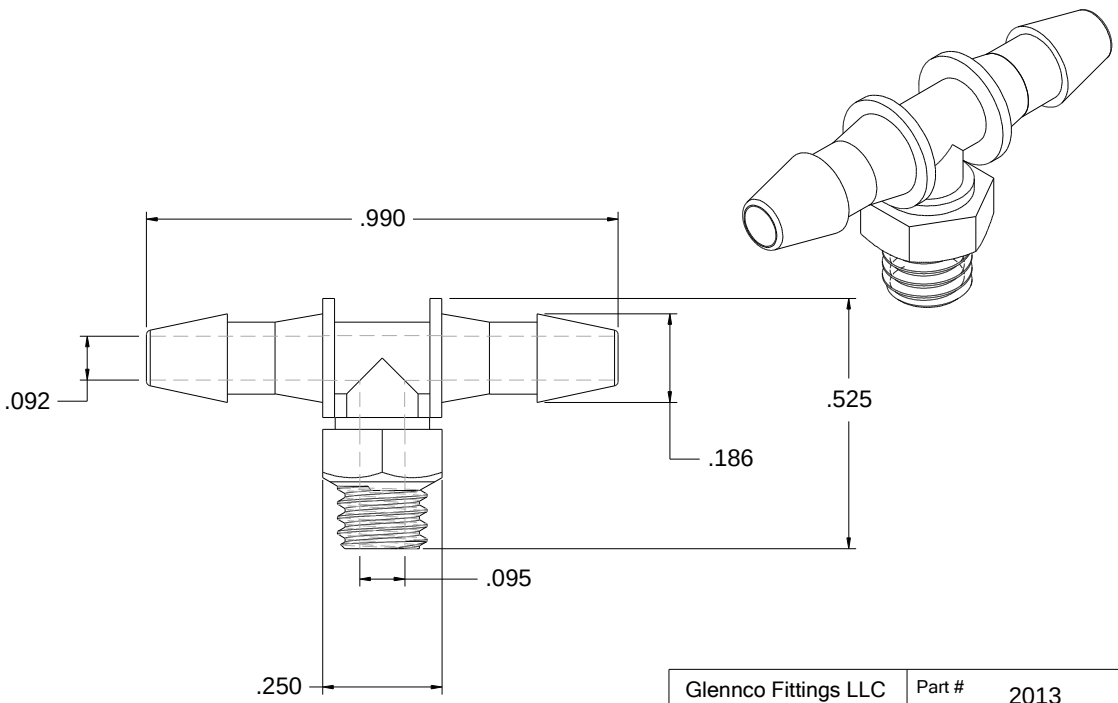

Glennco Fittings LLC	Part # 2013
For reference only Dimensions are in inches.	Threaded tee with 10-32 UNF thread & barbs for 1/8" I.D. tubing