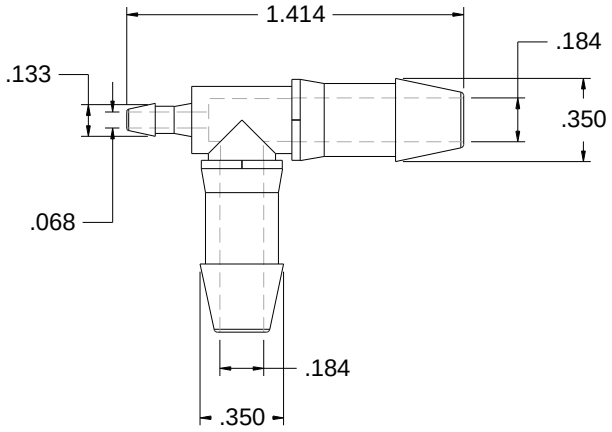

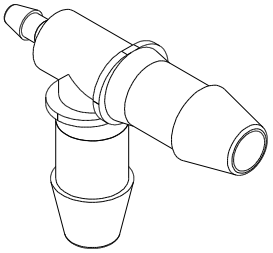

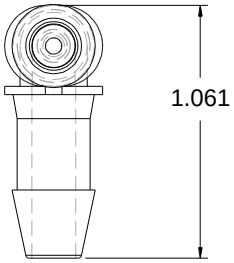

Glennco Fittings LLC	Part # 20112
For reference only Dimensions are in inches.	Run reduction tee for 1/4" to 3/32" ID tubing.