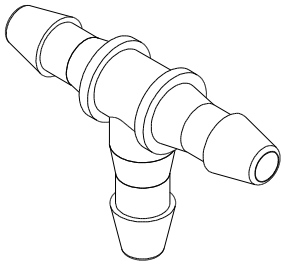

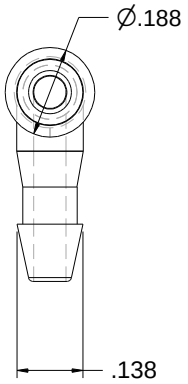

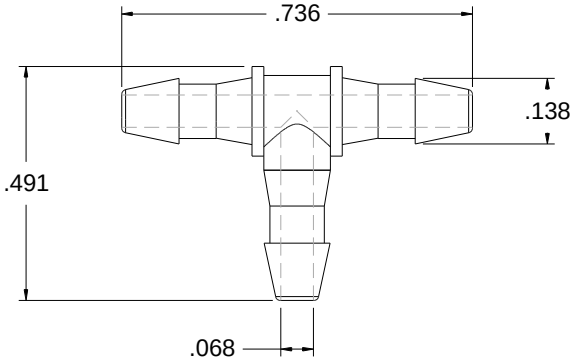

Glennco Fittings LLC	Part # 2002
For reference only Dimensions are in inches.	Equal leg tee for 3/32" ID tubing.