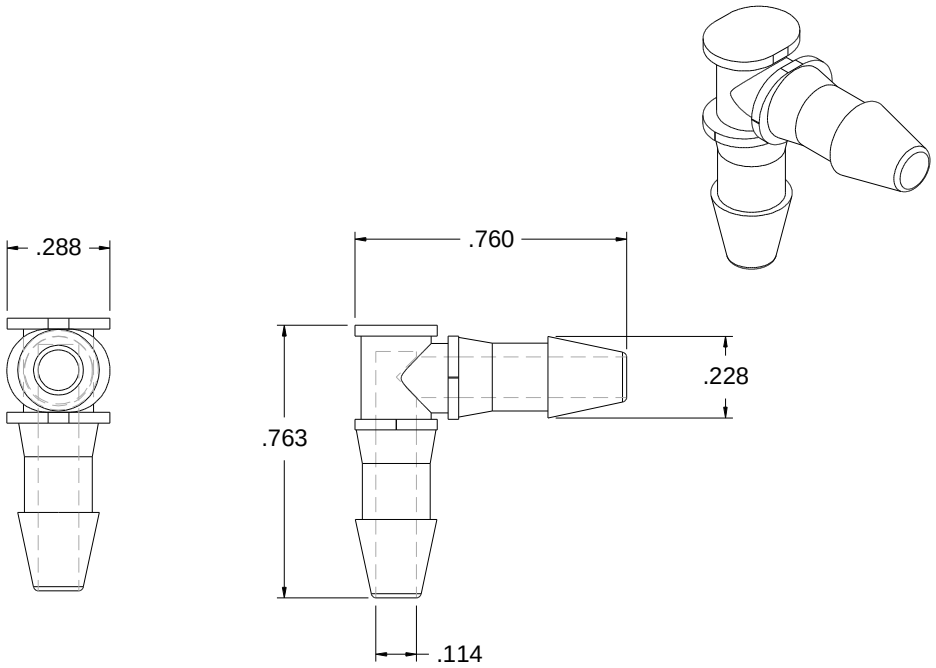

Glennco Fittings LLC	Part # 1204
For reference only Dimensions are in inches.	Equal leg elbow for 5/32" ID tubing.