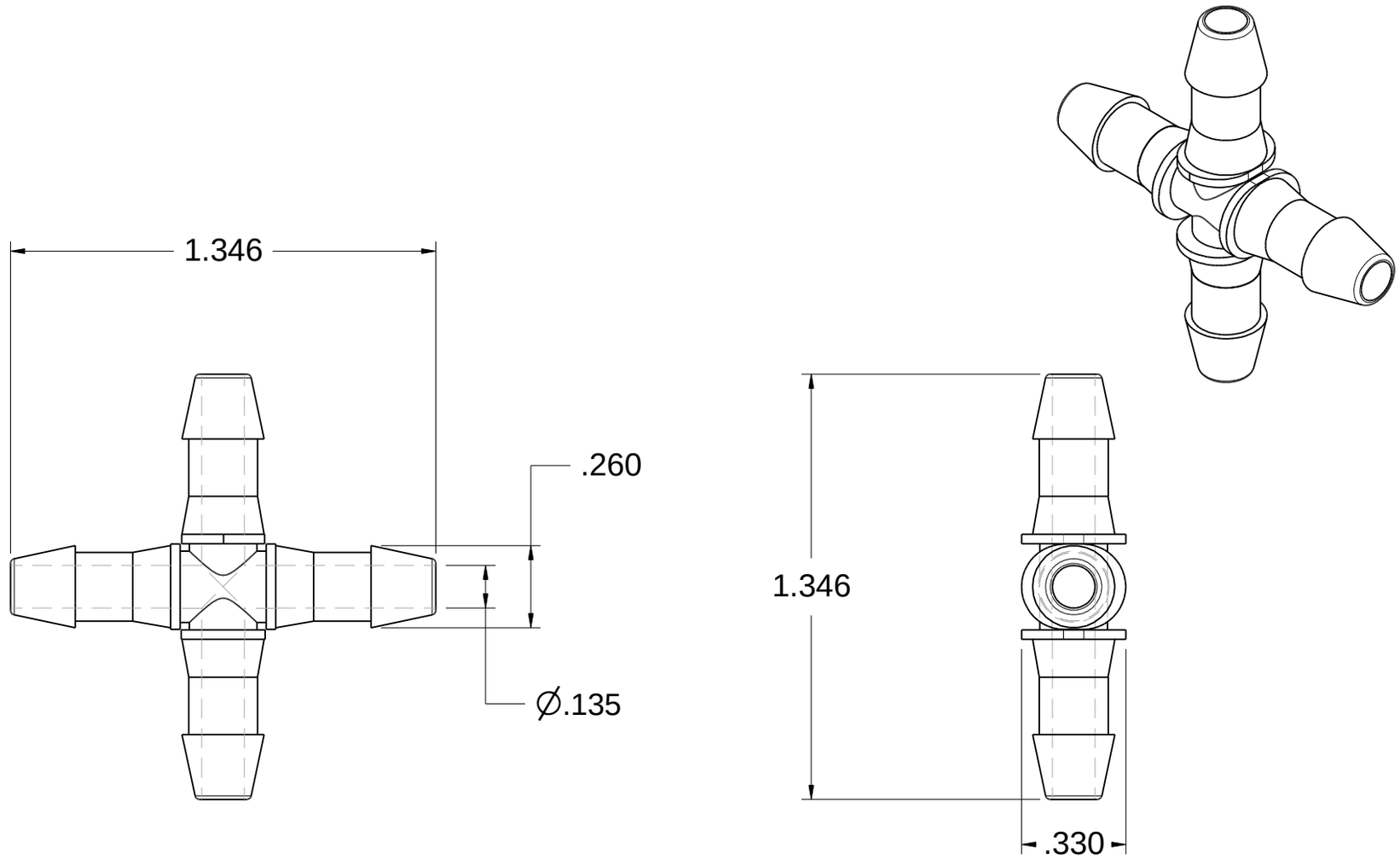

Glennco Fittings LLC	Part # 2405
For reference only Dimensions are in inches.	Equal barb cross for 3/16" ID tubing.