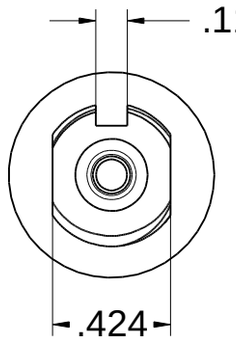

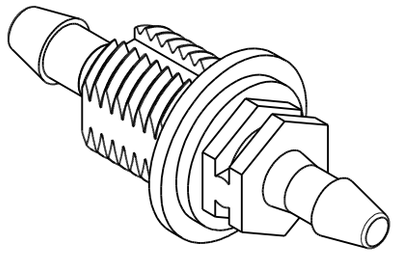

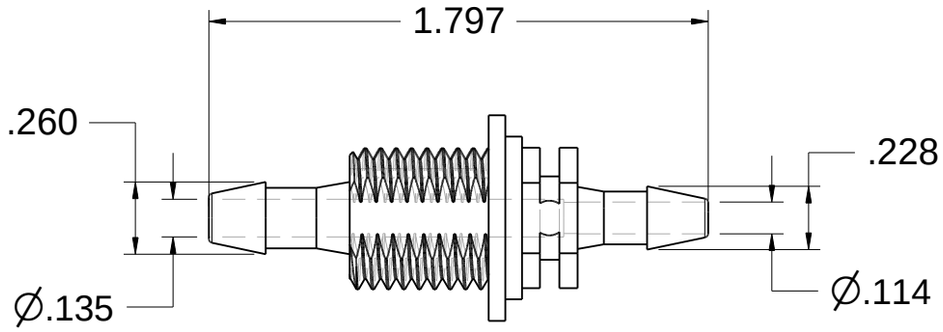

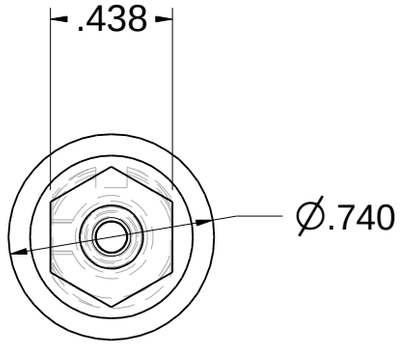

Glennco Fittings LLC	Part # 13144
For reference only Dimensions are in inches.	1/4-18 NPSM reduction bulkhead with barbs for 1/4" and 5/32" ID tubing.