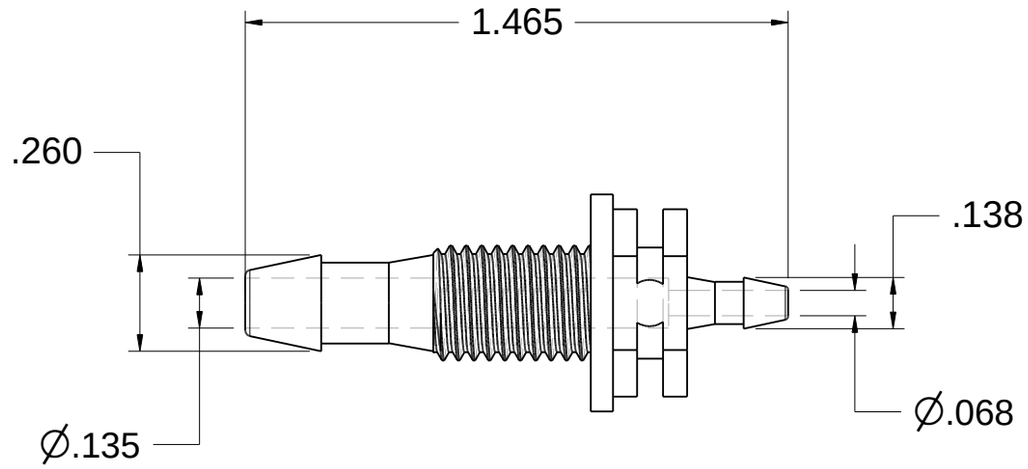

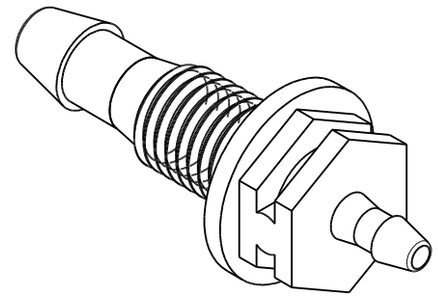

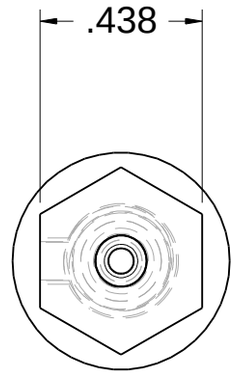

Glennco Fittings LLC	Part # 13112
For reference only Dimensions are in inches.	5/16-24 UNF reduction bulkhead with barbs for 3/16" and 3/32" ID tubing.