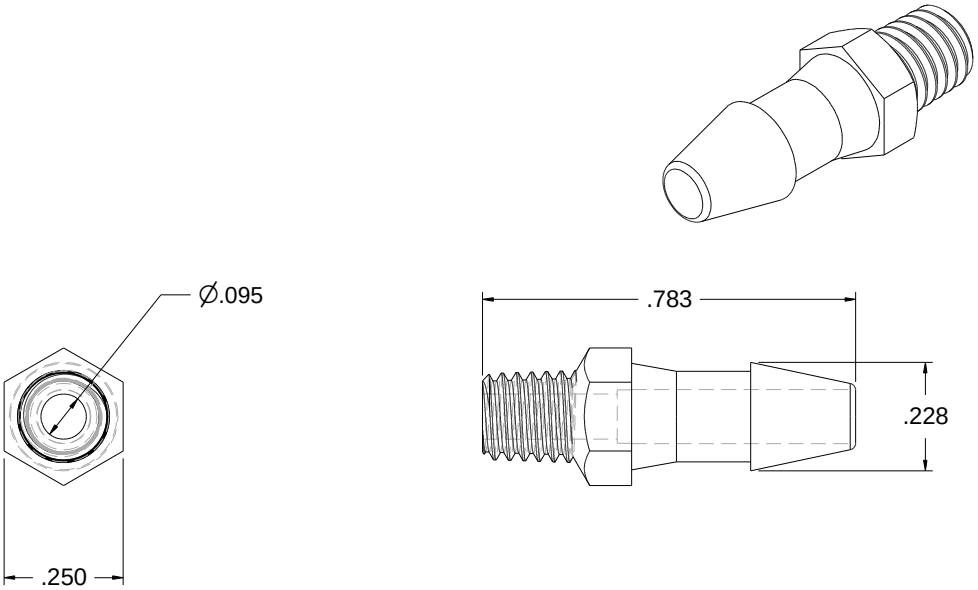


| | |
|---|---|
| Glennco Fittings LLC | Part # 0114 |
| For reference only<br>Dimensions are in inches. | Adapter with<br>10-32 taper thread &<br>barb for 5/32" ID tubing |