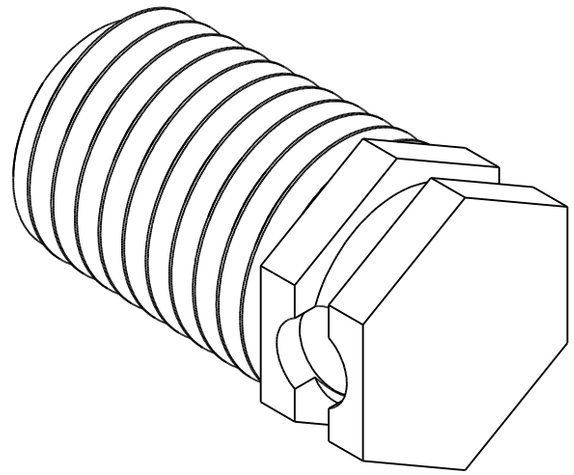

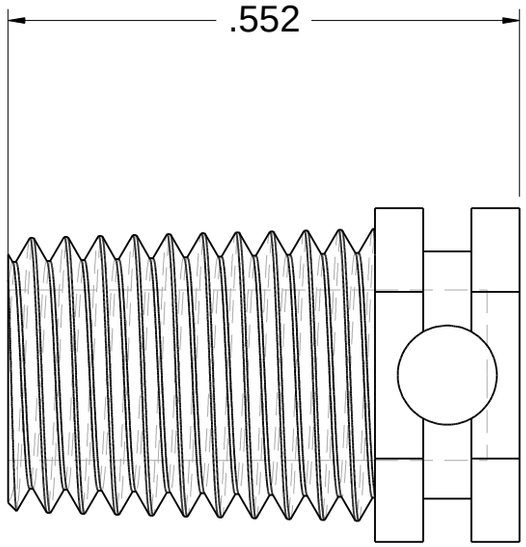

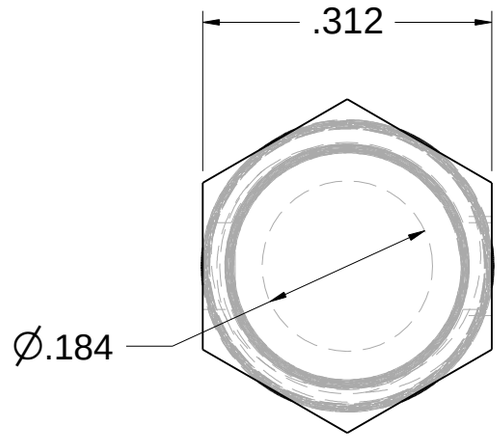

Glennco Fittings LLC	Part # 1614
For reference only Dimensions are in inches.	1/16-27 NPT threaded plug