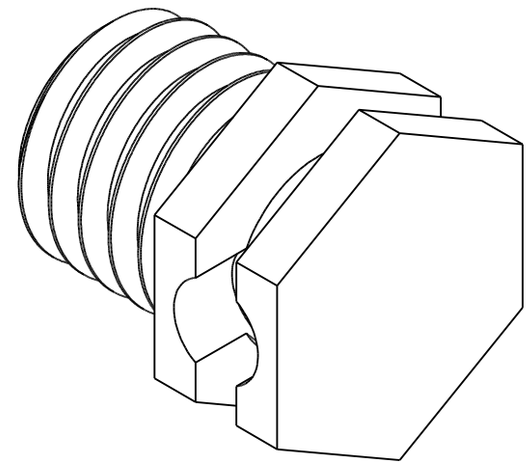

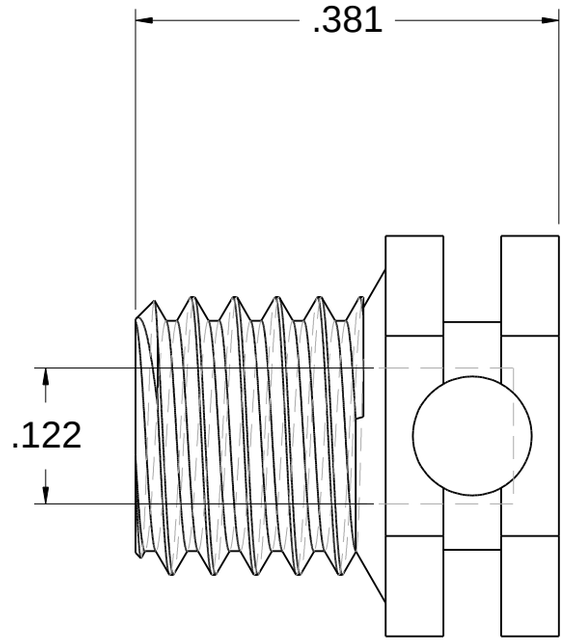

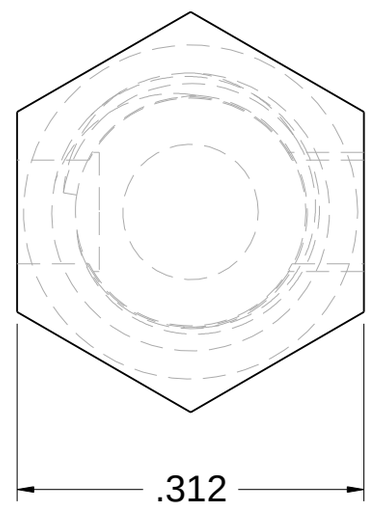

Glennco Fittings LLC	Part # 1613
For reference only Dimensions are in inches.	1/4-28 UNF Threaded plug